TRK ATTACHMENTS

A DIVISION OF LIFCO

2026 ATTACHMENT CATALOGUE

MADE IN THE USA AND CANADA

TABLE OF CONTENTS

ADAPTERS

Top Mount Adapter Plate 3
Volvo S1, S2, S3 Adapter Couplers 4

BUCKETS

Bucket Capacity 5
Ditching, Grading, or Cleanup Buckets 6
Severe Duty Digging Buckets 7
Skeleton Screening Buckets 8
Tooth Installation 25

COUPLERS

Severe Duty Multi-Grab Manual Coupler 9
How to install the Multi-Grab Coupler 11
How to use the Multi-Grab Coupler 11

RAKES

Compare Rakes 12
Severe Duty Root Rakes 15
Severe Duty Scoop Rakes 16
Heavy Duty Root Rakes 17
Heavy Duty Scoop Rakes 18
Low Profile Rakes 19
Low Profile Scoop Rakes 20
Deep Penetration Root Rakes 21
Tooth Installation 26

RIPPERS

Compare Rippers 22
Sabre Tooth Stump & Root Ripper 23
Severe Duty Rock Ripper & Frost Pick 23
Tooth Installation 26

STUMP PULLERS

Stump Pullers 24
Tooth Installation 26

THUMBS

How to install a Thumb 25

ACCESSORIES

Excavator Pins 27

ALL ATTACHMENTS ARE MADE IN THE USA AND CANADA

TOP MOUNT ADAPTER PLATE

TRK ATTACHMENTS
A DIVISION OF LIFCO

- Constructed from Canada and USA made T1 & AR400 Steel at all critical points.
- Pin spacing to your machine specifications.
- Bolt pattern to customer specifications.
- Bottom of base plate milled perfectly flat.

CLICK TO CHECK AVAILABILITY & PRICING

Machine Class	Top Mount (for Removable Pins)
8-11 Ton	(TMAP-008-011-R)
12-16 Ton	(TMAP-012-016-R)
17-21 Ton	(TMAP-017-021-R)
22-27 Ton	(TMAP-022-027-R)
28-35 Ton	(TMAP-028-035-R)
36-44 Ton	(TMAP-036-044-R)
45-55 Ton	(TMAP-045-055-R)

Wedge Style Ears (Non-standard only): Available.

1-800-952-7849
trkattachments.com
sales@trkattachments.com

All attachments include a 2 year limited warranty. If you have any questions or have a custom requirement for your attachment, please give us a call.

VOLVO S1, S2, S3 ADAPTER COUPLERS

TRK ATTACHMENTS
A DIVISION OF LIFCO

Volvo S1, S2, S3 couplers are also known as Bofors and Ackerman. Used on plate compactors, hydraulic rock breakers, shears, pulverizers or any other Excavator Attachment. Bolt-on or Weld-on styles available.

Weld-on style without bolt-holes (normally in stock) do not require the bottom surface to be machined perfectly flat. Any bolt-on style top mount normally needs to be milled flat (see Milled Flat Bottom Plate option below).

CLICK TO CHECK AVAILABILITY & PRICING

SHIMS
1/16” Thick Shims
1/32” Thick Shims

Volvo Coupler Class	Standard Adapter Mounting Head	Milled Flat Bottom Plate	Built into another Attachment
S1 (EC150, EC160, EC170, EC180, EC200, EC210, EC235, EC240)	(VAMH-015-024-S1)	(Product Upgrade)	(Product Upgrade)
S2 (EC240, EC250, EC290, EC300)	(VAMH-025-030-S2)	(Product Upgrade)	(Product Upgrade)
S3 (EC330, EC340, EC350,EC360, EC380, EC390, EC460, EC480)	(VAMH-033-048-S3)	(Product Upgrade)	(Product Upgrade)

Mounting pins sold separately.

1-800-952-7849
trkattachments.com
sales@trkattachments.com

All attachments include a 2 year limited warranty. If you have any questions or have a custom requirement for your attachment, please give us a call.

BUCKET CAPACITY

HEAPED CAPACITY VS STRUCK CAPACITY

The volume of the bucket plus the amount of material on top when not leveled off.

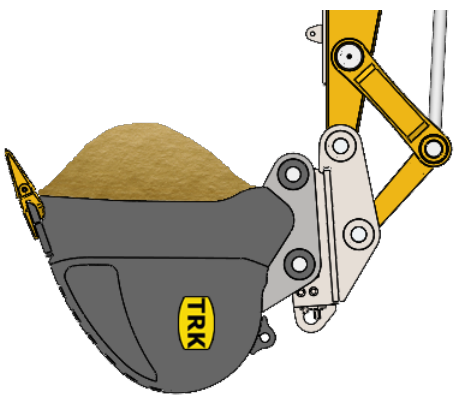

The bucket's volume upon leveling across the strike plane, or bucket top.

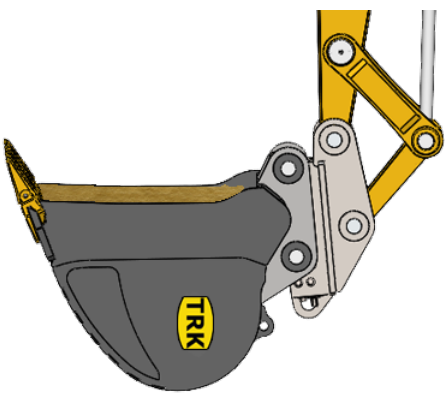

HOW TO CALCULATE THE REQUIRED BUCKET CAPACITY FOR THE JOB

1. Time your digging cycle. When the bucket starts digging in, start the timer, and stop when it starts digging on the next load. Divide 60 by the cycle time. For example, if the digging operation takes 0.75 minutes, you have 80 cycles per hour.

2. Divide the hourly production demand by the number of cycles per hour. For example, if 600 tons are required to be moved per hour and the average is 80 cycles per hour, you will need to move 7.5 tons per cycle.

3. Using a reliable source, find the standard weight of the material you will need to lift as well as the fill factor for the bucket. Based on material density, these values will indicate how much of a certain material the bucket can hold.

4. Divide the per cycle payload by the material density found in the last step. This will give you the nominal capacity of the bucket.

5. Divide the nominal bucket capacity by the fill factor for the bucket from Step 3. This will give you the required bucket capacity for whatever material you will be moving.

DITCHING, GRADING, OR CLEANUP BUCKET

TRK ATTACHMENTS

- Constructed from Canada and USA made T1 & AR400 Steel at all critical points.
- Tapered side plates.
- Comes standard with bolt-on Cutting Edge, Drainage Holes and bottom Wear Strips.

CLICK TO CHECK AVAILABILITY & PRICING

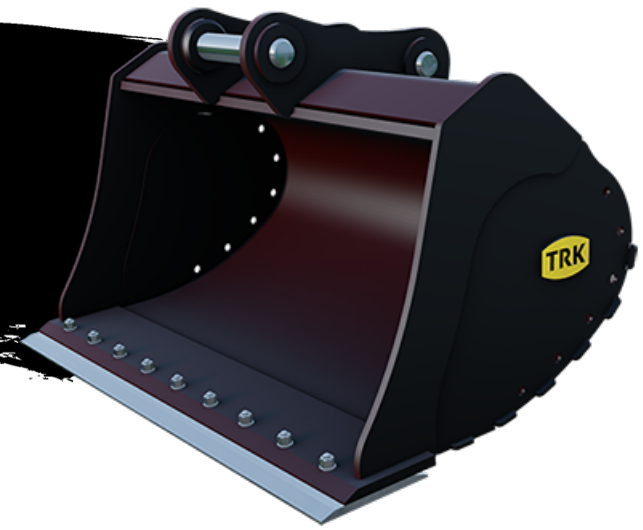

SPECIFICATIONS COMING SOON

1-800-952-7849

trkattachments.com

sales@trkattachments.com

All attachments include a 2 year limited warranty. If you have any questions or have a custom requirement for your attachment, please give us a call.

SEVERE DUTY DIGGING BUCKET

- **Constructed from Canada and USA made T1 & AR400 Steel at all critical points.**
- **D-Ring Lifting Lug welded on the back.**
- **AR400 Wear Strips come standard. Side cutters and additional wear components are optional.**
- **Ask us about our Extreme Duty Buckets.**
- **Comes standard with CAT style Rock Chisel J-Series teeth. Optional Spade Teeth or other tooth preferences are available (please inquire).**

Machine Class	Product Code	Teeth	Cut Width	Approx. Weight (Lbs)	*Rated Capacity (Cu Yd)
12-16 Ton	SDDB-012-016-W018T03	3	18″	921	0.32
	SDDB-012-016-W024T04	4	24″	1062	0.49
	SDDB-012-016-W030T04	4	30″	1166	0.67
	SDDB-012-016-W036T05	5	36″	1307	0.85
	SDDB-012-016-W042T05	5	42″	1411	1.03
	SDDB-012-016-W048T05	5	48″	1514	1.22
17-21 Ton	SDDB-017-021-W024T03	3	24″	1213	0.60
	SDDB-017-021-W030T04	4	30″	1373	0.82
	SDDB-017-021-W036T05	5	36″	1534	1.04
	SDDB-017-021-W042T05	5	42″	1656	1.27
	SDDB-017-021-W048T06	6	48″	1816	1.51
22-27 Ton	SDDB-022-027-W024T03	3	24″	1668	0.66
	SDDB-022-027-W030T04	4	30″	1879	0.91
	SDDB-022-027-W036T05	5	36″	2091	1.17
	SDDB-022-027-W042T05	5	42″	2259	1.44
	SDDB-022-027-W048T06	6	48″	2470	1.71
	SDDB-022-027-W054T06	6	54″	2638	1.98
28-35 Ton	SDDB-028-035-W024T03	3	24″	2067	0.67
	SDDB-028-035-W030T04	4	30″	2337	0.94
	SDDB-028-035-W036T05	5	36″	2607	1.21
	SDDB-028-035-W042T05	5	42″	2796	1.49
	SDDB-028-035-W048T05	5	48″	3066	1.78
	SDDB-028-035-W054T06	6	54″	3255	2.07
36-44 Ton	SDDB-036-044-W024T03	3	24″	2606	0.70
	SDDB-036-044-W030T03	3	30″	2844	0.99
	SDDB-036-044-W036T04	4	36″	3175	1.29
	SDDB-036-044-W042T04	4	42″	3413	1.59
	SDDB-036-044-W048T05	5	48″	3745	1.91
	SDDB-036-044-W054T05	5	54″	3982	2.23
	SDDB-036-044-W060T06	6	60″	4314	2.55
	SDDB-036-044-W066T06	6	66″	4552	2.87
45-55 Ton	SDDB-045-055-W030T03	3	30″	3777	1.07
	SDDB-045-055-W036T04	4	36″	4230	1.41
	SDDB-045-055-W042T04	4	42″	4515	1.76
	SDDB-045-055-W048T05	5	48″	4969	2.13
	SDDB-045-055-W054T05	5	54″	5254	2.50
	SDDB-045-055-W060T06	6	60″	5708	2.87
	SDDB-045-055-W066T06	6	66″	5993	3.24
	SDDB-045-055-W072T07	7	72″	6446	3.62

Pins sold separately. Wedge Style Ears: Available (Non-standard patterns, additional charges may apply).

*Rated Capacity is heaped. Struck Capacity is approx. 25% less.

CLICK TO CHECK AVAILABILITY & PRICING

All attachments include a 2 year limited warranty. If you have any questions or have a custom requirement for your attachment, please give us a call.

1-800-952-7849

trkattachments.com

sales@trkattachments.com

SKELETON SCREENING BUCKET

TRK ATTACHMENTS
A DIVISION OF LIFCO

- Solid AR400 extra thick ribs last long for high abrasion.
- Constructed from Canada and USA made T1 & AR400 Steel at all critical points.
- Standard screening gap is 4” but we do custom sizes as well.
- Sift screen rocks, brush and large debris while leaving behind the soil.
- Comes standard with CAT style J-Series teeth.
- Swap teeth for bolt-on cutting edge at no extra charge. If you require a different style of tooth, please inquire.

CLICK TO CHECK AVAILABILITY & PRICING

Machine Class	Product Code	Teeth	Width	Approx. Weight (Lbs)	Cu Yd. Capacity
12-16 Ton	SKSB-012-016-W036T05	5	36″	1480	0.83
	SKSB-012-016-W042T05	5	42″	1660	0.92
	SKSB-012-016-W048T06	6	48″	1854	1.11
17-21 Ton	SKSB-017-021-W036T05	5	36″	1774	0.93
	SKSB-017-021-W042T05	5	42″	2006	1.05
	SKSB-017-021-W048T06	6	48″	2104	1.22
22-27 Ton	SKSB-022-027-W042T05	5	42″	2176	1.24
	SKSB-022-027-W048T06	6	48″	2420	1.42
	SKSB-022-027-W054T06	6	54″	2685	1.58
28-35 Ton	SKSB-028-035-W048T05	5	48″	3087	1.58
	SKSB-028-035-W054T06	6	54″	3266	1.72
	SKSB-028-035-W060T07	7	60″	3439	1.89
36-44 Ton	SKSB-036-044-W048T05	5	48″	4208	2.10
	SKSB-036-044-W054T06	6	54″	4401	2.26
	SKSB-036-044-W060T07	7	60″	4585	2.51
45-55 Ton	SKSB-045-055-W054T06	6	54″	5650	2.44
	SKSB-045-055-W060T06	6	60″	5920	2.75
	SKSB-045-055-W072T07	7	72″	6430	3.36

Pins sold separately. Wedge Style Ears: Available (Non-standard patterns, additional charges may apply).

1-800-952-7849
trkattachments.com
sales@trkattachments.com

All attachments include a 2 year limited warranty. If you have any questions or have a custom requirement for your attachment, please give us a call.

SEVERE DUTY MULTI-GRAB MANUAL COUPLER

TRK ATTACHMENTS
A DIVISION OF LIFCO

- Includes 1 set of Hardened Alloy pins.
- Constructed from Canada and USA made T1 & AR400 Steel at all critical points.
- Change attachments in minutes. No pins to hammer.
- Grabs variable pin centres.
- Requires only a 1/2” drive ratchet to operate.
- Cinches up the slack as pins and coupler wear.

CLICK TO CHECK AVAILABILITY & PRICING

Multi-Grab Ranges	4 to 9 Ton Machines				10 to 78 Ton Machines						
Pin Size	40mm	45mm	50mm	55mm	60mm	65mm	70mm	80mm	90mm	100mm	110mm
Grab Range Min	8 1/2”	8 3/4”	9”	12”	12 1/2”	12 1/2”	13 3/4”	15 1/4”	16 3/4”	17 1/2”	19”
Grab Range Max	Customized per OEM Specs				17”	17 1/2”	18 3/4”	20 3/4”	23 1/2”	25”	26”

4-6 Ton Machine Class	MGC040-004-006 / MGC045-004-006 / MGC050-004-006										
7-9 Ton Machine Class	MGC040-007-009 / MGC045-007-009 / MGC050-007-009				MGC060-007-009						
10-14 Ton Machine Class	MGC040-010-014 / MGC045-010-014 / MGC050-010-014				MGC060-010-014	MGC065-010-014	MGC070-010-014				
15-19 Ton Machine Class					MGC060-015-019	MGC065-015-019	MGC070-015-019	MGC080-015-019			
20-25 Ton Machine Class							MGC070-020-025	MGC080-020-025			
26-30 Ton Machine Class								MGC080-026-030	MGC090-026-030		
31-36 Ton Machine Class								MGC080-031-036	MGC090-031-036	MGC100-031-036	
37-45 Ton Machine Class									MGC090-037-045	MGC100-037-045	MGC110-037-045
46-55 Ton Machine Class										MGC100-046-055	MGC110-046-055

Pins sold separately.

1-800-952-7849

trkattachments.com

sales@trkattachments.com

All attachments include a 2 year limited warranty. If you have any questions or have a custom requirement for your attachment, please give us a call.

MULTI-GRAB MANUAL COUPLER

FOR MACHINES UNDER 4 TONS

TRK ATTACHMENTS

A DIVISION OF LIFCO

Our smallest available couplers are designed for machines 4-6 tons. If your machines weight falls under the standard weight class, but uses 40mm pins or higher, we often can still offer a coupler for your machine, however the customer is responsible to ensure the coupler will not overload their machine when in use with their attachments.

Product Code	Approx. Weight (Lbs)
MGC040-004-006	165
MGC040-007-009	185
MGC040-010-014	205
MGC045-004-006	240
MGC045-007-009	260
MGC045-010-014	280

1-800-952-7849

trkattachments.com

sales@trkattachments.com

All attachments include a 2 year limited warranty. If you have any questions or have a custom requirement for your attachment, please give us a call.

TRK ATTACHMENTS
A DIVISION OF LIFCO

HOW TO INSTALL YOUR NEW MULTI-GRAB COUPLER

1. Inspect the Multi-Grab Coupler and accessories upon delivery. Check the packaging for any damage which might have occurred during shipment. Ensure all components have been delivered. If anything appears to be damaged, missing or incorrect, contact TRK before continuing with the installation.

2. Thoroughly clean pin bores and boss faces on the machine before installation.

3. Unfasten the retaining hardware and remove the pins that came pre-installed in the Multi-Grab Coupler. These pins will be used later, either to pin the coupler to the machine, or used with an existing attachment, depending on your order.

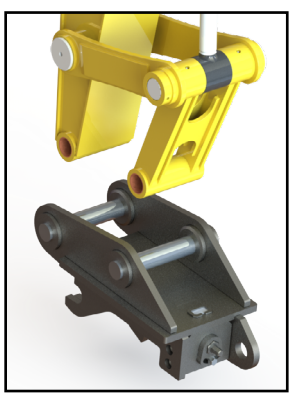

4. Place the Multi-Grab Coupler on the ground oriented as shown in the image to the right.

5. Lower the arm in between the lugs and align the pin bores of the stick and link with the corresponding bores on the Coupler.

6. Apply grease to the pin bores of the coupler before pinning the coupler to the machine.

7. Secure the pins using the retaining hardware included with your Multi-Grab Coupler.

8. Ensure that the Multi-Grab Coupler is the correct fit by fully curling and crowding bucket linkage slowly, watching for interference or resistance. If there are any signs that the Multi-Grab Coupler is not operating smoothly, contact TRK. Do no attempt any modifications to either the Multi-Grab Coupler or the machine.

HOW TO OPERATE YOUR NEW MULTI-GRAB COUPLER

Using a 1/2” drive ratchet, adjust the mover grabber jaw to make a tight fit.
Secure rear auxlock before operation.

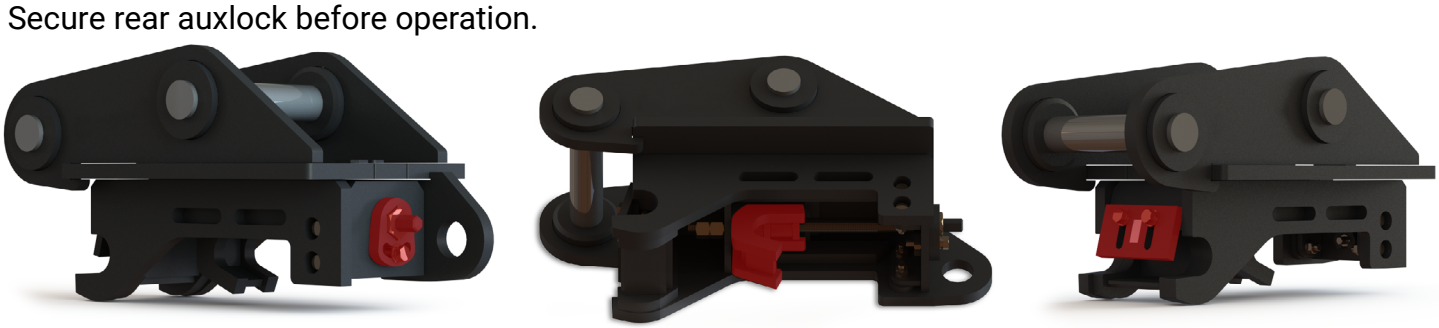

WARNING **DO NOT USE IMPACT WRENCH. REQUIRES A 1/2” DRIVE RATCHET.**
RECOMMENDED TORQUE: 150 FT/LBS. DO NOT EXCEED: 200 FT/LBS.

COMPARE RAKES

COMMON RAKE USES

	HEAVY DUTY ROOT RAKE	SEVERE DUTY ROOT RAKE	HEAVY DUTY SCOOP RAKE	SEVERE DUTY SCOOP RAKE	LOW PROFILE RAKE	LOW PROFILE SCOOP RAKE	DEEP PENETRATION RAKE
Breaking up the Ground Soil	✓	✓	✓	✓	✓	✓	✓
Removing Smaller Rocks & Loose Roots	✓	✓	✓	✓	✓	✓	✓
Removing Larger Rocks & Cutting Through Roots		✓		✓			✓
Removing Stumps		✓		✓			✓
Demolition Cleanup		✓		✓			
Screening			✓	✓		✓	
Thumb Compatibility	✓	✓					

STANDARD VS SCOOP SHAPE

The shape of your rake is crucial as it will dictate how you will collect, clear, and separate different types of material.

A. The Standard shape is the ideal geometry for use with a thumb for grappling.

B. The Scoop shape has the ability to move greater amounts of material, without needing a thumb.

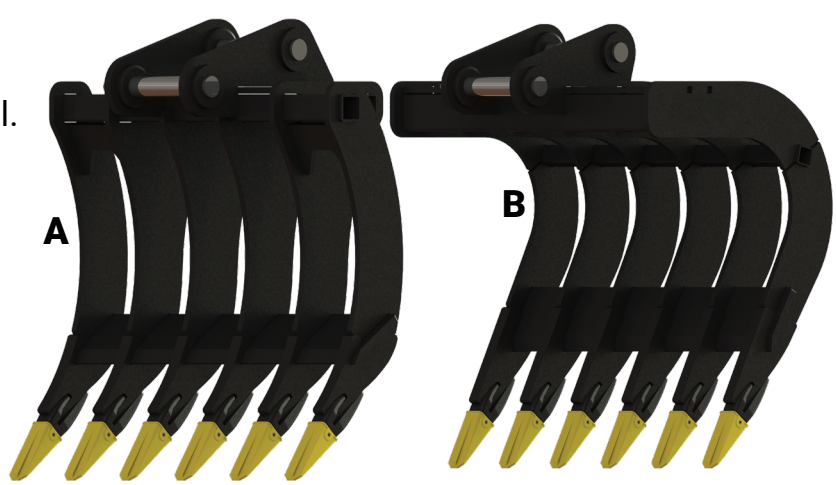

LOW PROFILE VS DEEP PENETRATION

A. Our Low Profile Rakes have a small screening gap to leave a clean finish in the ground.

B. Longer and Thicker shanks on the Deep Penetration Rake allow for use in extreme conditions.

C. The Deep Penetration Rake has replaceable teeth, making it easier to do a quick repair without leaving your work site, should a tooth break. The Low Profile would be used after all the large objects have been removed by the Deep Penetration Rake, and usually do not require replaceable teeth.

Low Profile Rake

Low Profile Scoop Rake

Deep Penetration Rake

HEAVY DUTY VS SEVERE DUTY

A. The Heavy Duty has thinner shanks to leave a cleaner finish. Since the Severe Duty will be used on tougher materials, it has thicker shanks for longevity.

B. A Severe Duty rake features a bevel on the cutting edge to aid in cutting through roots.

C. The Severe Duty has replaceable teeth, making it easier to do a quick repair without leaving your work site.

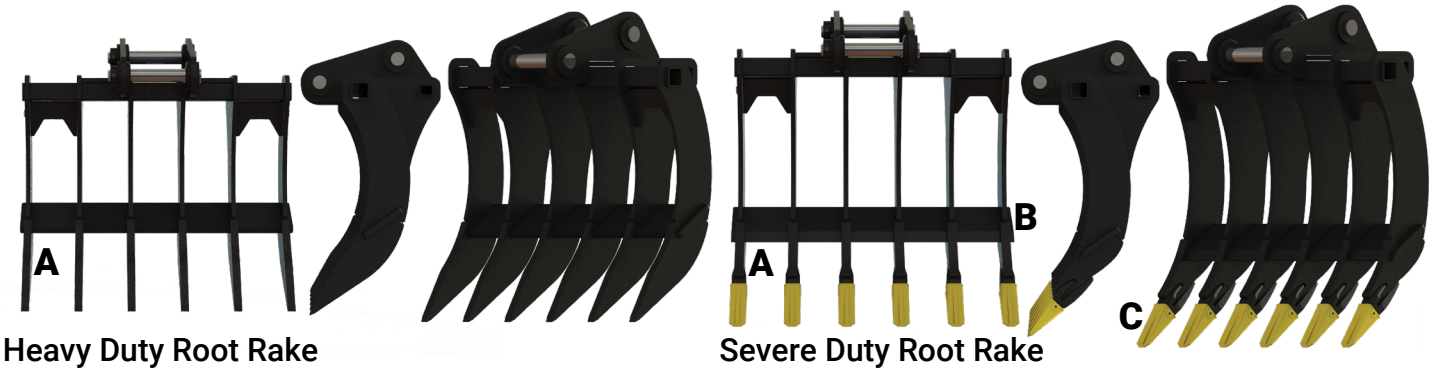

Heavy Duty Root Rake

Severe Duty Root Rake

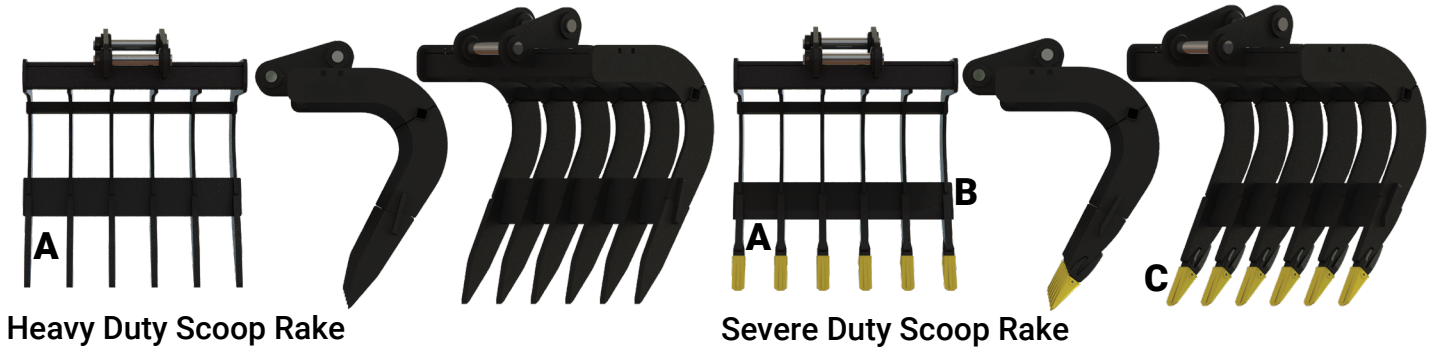

Heavy Duty Scoop Rake

Severe Duty Scoop Rake

1-800-952-7849

trkattachments.com

sales@trkattachments.com

All attachments include a 2 year limited warranty. If you have any questions or have a custom requirement for your attachment, please give us a call.

SEVERE DUTY ROOT RAKE

TRK ATTACHMENTS

- Case hardened pin bosses.
- Constructed from Canada and USA made T1 & AR400 Steel at all critical points.
- Tapered Cutting Edge easily cuts through roots.
- Extra thick shanks support themselves without gussets.
- Comes standard with CAT style J-Series teeth. If you require a different style of tooth, please inquire.

CLICK TO CHECK AVAILABILITY & PRICING

Machine Class	Product Code	Tines	Width	Shank Thickness	Tooth Type	Approx. Weight (Lbs)
8-11 Ton	SVDR-008-011-W036T04	4	36″	1.25″	J200	537
	SVDR-008-011-W042T05	5	42″			549
	SVDR-008-011-W048T06	6	48″			657
12-16 Ton	SVDR-012-016-W036T04	4	36″	1.50″	J225	826
	SVDR-012-016-W042T05	5	42″			879
	SVDR-012-016-W048T06	6	48″			1045
17-21 Ton	SVDR-017-021-W048T05	5	48″	1.75″	J250	1303
	SVDR-017-021-W054T05	5	54″			1291
	SVDR-017-021-W060T06	6	60″			1496
22-27 Ton	SVDR-022-027-W048T05	5	48″	2.00″	J300	1764
	SVDR-022-027-W060T06	6	60″			1937
	SVDR-022-027-W072T07	7	72″			2285
28-35 Ton	SVDR-028-035-W048T05	5	48″	2.50″	J350	2552
	SVDR-028-035-W060T06	6	60″	2.00″		2461
	SVDR-028-035-W072T07	7	72″			2909
36-44 Ton	SVDR-036-044-W060T06	6	60″	2.50″	J400	3143
	SVDR-036-044-W072T07	7	72″			3710
	SVDR-036-044-W084T08	8	84″			4024
45-55 Ton	SVDR-045-055-W060T06	6	60″	3.00″	J450	4510
	SVDR-045-055-W072T07	7	72″	2.50″	J400	4808
	SVDR-045-055-W084T08	8	84″			5156

Pins sold separately. Wedge Style Ears: Available (Non-standard patterns, additional charges may apply).

1-800-952-7849

trkattachments.com

sales@trkattachments.com

All attachments include a 2 year limited warranty. If you have any questions or have a custom requirement for your attachment, please give us a call.

SEVERE DUTY SCOOP RAKE

- Case hardened pin bosses.
- Constructed from Canada and USA made T1 & AR400 Steel at all critical points.
- Tapered Cutting Edge easily cuts through roots.
- Extra thick shanks support themselves without gussets.
- Comes standard with CAT style J-Series teeth. If you require a different style of tooth, please inquire.

CLICK TO CHECK AVAILABILITY & PRICING

Machine Class	Product Code	Tines	Width	Shank Thickness	Tooth Type	Approx. Weight (Lbs)
8-11 Ton	SDSR-008-011-W036T04	4	36″	1.25″	J200	547
	SDSR-008-011-W042T05	5	42″			655
	SDSR-008-011-W048T06	6	48″			763
12-16 Ton	SDSR-012-016-W036T04	4	36″	1.50″	J225	871
	SDSR-012-016-W042T05	5	42″			1043
	SDSR-012-016-W048T06	6	48″			1215
17-21 Ton	SDSR-017-021-W048T05	5	48″	1.75″	J250	1611
	SDSR-017-021-W054T05	5	54″			1492
	SDSR-017-021-W060T06	6	60″			1721
22-27 Ton	SDSR-022-027-W048T05	5	48″	2.00″	J300	1902
	SDSR-022-027-W060T06	6	60″			2278
	SDSR-022-027-W072T07	7	72″			2654
28-35 Ton	SDSR-028-035-W048T05	5	48″	2.50″	J350	2715
	SDSR-028-035-W060T06	6	60″	2.00″		2870
	SDSR-028-035-W072T07	7	72″			3338
36-44 Ton	SDSR-036-044-W060T06	6	60″	2.50″	J400	3795
	SDSR-036-044-W072T07	7	72″			4434
	SDSR-036-044-W084T08	8	84″	2.00″	J350	4105
45-55 Ton	SDSR-045-055-W060T06	6	60″	3.00″	J450	5592
	SDSR-045-055-W072T07	7	72″	2.50″	J400	5841
	SDSR-045-055-W084T08	8	84″			6663

Pins sold separately. Wedge Style Ears: Available (Non-standard patterns, additional charges may apply).

1-800-952-7849

trkattachments.com

sales@trkattachments.com

All attachments include a 2 year limited warranty. If you have any questions or have a custom requirement for your attachment, please give us a call.

HEAVY DUTY ROOT RAKE

TRK ATTACHMENTS

- Case hardened pin bosses.
- Constructed from Canada and USA made T1 & AR400 Steel at all critical points.
- Material easily flows through shanks leaving smaller stones & debris in the ground.
- Thick shanks support themselves without gussets.
- Heavy Duty Rakes are not designed for extreme applications (eg. Deep penetration in hard ground, ripping out large stumps and rocks, etc.). Please inquire about our Severe Duty Root Rakes which are designed for these extreme applications.

CLICK TO CHECK AVAILABILITY & PRICING

Correction: Edge is not beveled as shown in the photo.

Machine Class	Product Code	Tines	Width	Shank Thickness	Approx. Weight (Lbs)
8-11 Ton	HDRR-008-011-W036T04	4	36″	1.00″	511
	HDRR-008-011-W042T05	5	42″		537
	HDRR-008-011-W048T06	6	48″		643
12-16 Ton	HDRR-012-016-W036T04	4	36″	1.25″	786
	HDRR-012-016-W042T05	5	42″		824
	HDRR-012-016-W048T06	6	48″		978
17-21 Ton	HDRR-017-021-W048T04	4	48″	1.50″	1276
	HDRR-017-021-W054T05	5	54″		1190
	HDRR-017-021-W060T06	6	60″		1402
22-27 Ton	HDRR-022-027-W048T05	5	48″	1.75″	1692
	HDRR-022-027-W060T06	6	60″		1843
	HDRR-022-027-W072T07	7	72″		1993
28-35 Ton	HDRR-028-035-W048T05	5	48″	2.00″	2443
	HDRR-028-035-W060T06	6	60″		2416
	HDRR-028-035-W072T07	7	72″		2853
36-44 Ton	HDRR-036-044-W060T06	6	60″	2.00″	2851
	HDRR-036-044-W072T07	7	72″		3364
	HDRR-036-044-W084T08	8	84″		3155
45-55 Ton	HDRR-045-055-W060T06	6	60″	2.50″	4266
	HDRR-045-055-W072T07	7	72″		4707
	HDRR-045-055-W084T08	8	84″		5028

Pins sold separately. Wedge Style Ears: Available (Non-standard patterns, additional charges may apply).

1-800-952-7849

trkattachments.com

sales@trkattachments.com

All attachments include a 2 year limited warranty. If you have any questions or have a custom requirement for your attachment, please give us a call.

HEAVY DUTY SCOOP RAKE

TRK ATTACHMENTS

- Case hardened pin bosses.
- Constructed from Canada and USA made T1 & AR400 Steel at all critical points.
- Material easily flows through shanks leaving smaller stones & debris in the ground.
- Thick shanks support themselves without gussets.
- Heavy Duty Rakes are not designed for extreme applications (eg. Deep penetration in hard ground, ripping out large stumps and rocks, etc.). Please inquire about our Severe Duty Scoop Rakes which are designed for these extreme applications.

CLICK TO CHECK AVAILABILITY & PRICING

Machine Class	Product Code	Tines	Width	Shank Thickness	Approx. Weight (Lbs)
8-11 Ton	HDSR-008-011-W036T04	4	36″	1.00″	534
	HDSR-008-011-W042T05	5	42″		637
	HDSR-008-011-W048T06	6	48″		739
12-16 Ton	HDSR-012-016-W036T04	4	36″	1.25″	850
	HDSR-012-016-W042T05	5	42″		1013
	HDSR-012-016-W048T06	6	48″		1177
17-21 Ton	HDSR-017-021-W048T04	4	48″	1.50″	1383
	HDSR-017-021-W054T05	5	54″		1454
	HDSR-017-021-W060T06	6	60″		1670
22-27 Ton	HDSR-022-027-W048T05	5	48″	1.75″	1858
	HDSR-022-027-W060T06	6	60″		2221
	HDSR-022-027-W072T07	7	72″		2585
28-35 Ton	HDSR-028-035-W048T05	5	48″	2.00″	2647
	HDSR-028-035-W060T06	6	60″		2865
	HDSR-028-035-W072T07	7	72″		3329
36-44 Ton	HDSR-036-044-W060T06	6	60″	2.00″	3566
	HDSR-036-044-W072T07	7	72″		4161
	HDSR-036-044-W084T08	8	84″		4232
45-55 Ton	HDSR-045-055-W060T06	6	60″	2.50″	5440
	HDSR-045-055-W072T07	7	72″		5844
	HDSR-045-055-W084T08	8	84″		6659

Pins sold separately. Wedge Style Ears: Available (Non-standard patterns, additional charges may apply).

1-800-952-7849

trkattachments.com

sales@trkattachments.com

All attachments include a 2 year limited warranty. If you have any questions or have a custom requirement for your attachment, please give us a call.

LOW PROFILE RAKE

TRK ATTACHMENTS
A DIVISION OF LIFCO

- Features an extra wide body with close tines. These are used after all the large rocks and big stumps have been removed. They work great to get all the loose roots and smaller rocks out, leaving you with a nice landscaped finish.
- Constructed from Canada and USA made T1 & AR400 Steel at all critical points.
- Thick shanks support themselves without gussets.
- Standard screening gap is 6 inches. We do custom sizes between 4” and 8” as well, please call for custom quote.
- Heavy Duty Low Profile Rakes are not designed for extreme applications (eg. Deep penetration in hard ground, ripping out large stumps and rocks, etc.). Please inquire about our Severe Duty Rakes.

CLICK TO CHECK AVAILABILITY & PRICING

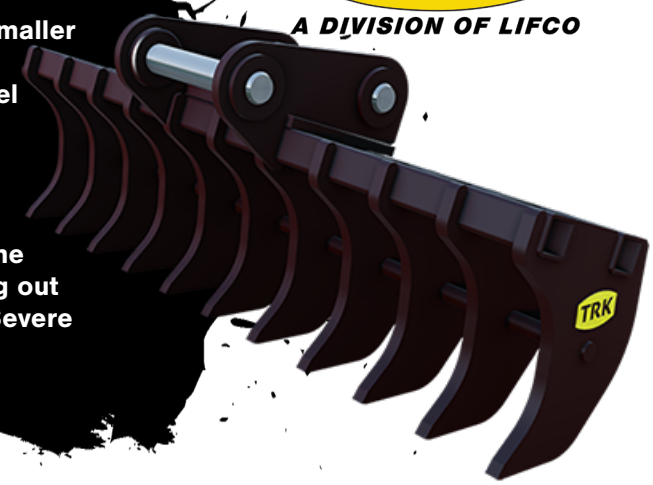

Machine Class	Product Code	Width	Shank Thickness	Rake Height	Approx. Weight (Lbs)
8-11 Ton	LOPR-008-011-W048T06	48″	0.75″	14″	Currently Unavailable
	LOPR-008-011-W060T06	60″			
	LOPR-008-011-W072T06	72″			
12-16 Ton	LOPR-012-016-W060T06	60″	1.00″	15″	
	LOPR-012-016-W072T06	72″			
	LOPR-012-016-W084T06	84″			
17-21 Ton	LOPR-017-021-W060T06	60″	1.25″	16″	
	LOPR-017-021-W072T06	72″			
	LOPR-017-021-W084T06	84″			
22-27 Ton	LOPR-022-027-W060T06	60″	1.25″	17″	
	LOPR-022-027-W072T06	72″			
	LOPR-022-027-W084T06	84″			
28-35 Ton	LOPR-028-035-W072T06	72″	1.50″	18″	
	LOPR-028-035-W084T06	84″			
	LOPR-028-035-W096T06	96″			
36-44 Ton	LOPR-036-044-W084T06	84″	1.75″	19″	
	LOPR-036-044-W096T06	96″			
	LOPR-036-044-W108T06	108″			
45-55 Ton	LOPR-045-055-W096T06	96″	2.00″	20″	
	LOPR-045-055-W108T06	108″			
	LOPR-045-055-W120T06	120″			

Pins sold separately. Wedge Style Ears: Available (Non-standard patterns, additional charges may apply).

1-800-952-7849
trkattachments.com
sales@trkattachments.com

All attachments include a 2 year limited warranty. If you have any questions or have a custom requirement for your attachment, please give us a call.

LOW PROFILE SCOOP RAKE

TRK ATTACHMENTS
A DIVISION OF LIFCO

- Features an extra wide body with close tines. These are used after all the large rocks and big stumps have been removed. They work great to get all the loose roots and smaller rocks out, leaving you with a nice landscaped finish.
- Constructed from Canada and USA made T1 & AR400 Steel at all critical points.
- Thick shanks support themselves without gussets.
- Standard screening gap is 6 inches. We do custom sizes between 4” and 8” as well, please call for custom quote.
- Heavy Duty Low Profile ScoopRakes are not designed for extreme applications (eg. Deep penetration in hard ground, ripping out large stumps and rocks, etc.). Please inquire about our Severe Duty Scoop Rakes.

CLICK TO CHECK AVAILABILITY & PRICING

Machine Class	Product Code	Tines	Width	Shank Thickness	Rake Height	Approx. Weight (Lbs)
8-11 Ton	LPSR-008-011-W048T08	8	48”	0.75”	20”	Currently Unavailable
	LPSR-008-011-W060T09	9	60”			
	LPSR-008-011-W072T11	11	72”			
12-16 Ton	LPSR-012-016-W060T09	9	60”	1.00”	22”	
	LPSR-012-016-W072T11	11	72”			
	LPSR-012-016-W084T12	12	84”			
17-21 Ton	LPSR-017-021-W060T09	9	60”	1.25”	25”	
	LPSR-017-021-W072T10	10	72”			
	LPSR-017-021-W084T12	12	84”			
22-27 Ton	LPSR-022-027-W060T09	9	60”	1.25”	28”	
	LPSR-022-027-W072T10	10	72”			
	LPSR-022-027-W084T12	12	84”			
28-35 Ton	LPSR-028-035-W072T10	10	72”	1.50”	32”	
	LPSR-028-035-W084T12	12	84”			
	LPSR-028-035-W096T13	13	96”			
36-44 Ton	LPSR-036-044-W084T11	11	84”	1.75”	36”	
	LPSR-036-044-W096T13	13	96”			
	LPSR-036-044-W108T14	14	108”			
45-55 Ton	LPSR-045-055-W096T12	12	96”	2.00”	40”	
	LPSR-045-055-W108T14	14	108”			
	LPSR-045-055-W120T15	15	120”			

Pins sold separately. Wedge Style Ears: Available (Non-standard only).

1-800-952-7849
trkattachments.com
sales@trkattachments.com

All attachments include a 2 year limited warranty. If you have any questions or have a custom requirement for your attachment, please give us a call.

DEEP PENETRATION RAKE

TRK ATTACHMENTS

- Case hardened pin bosses.
- Constructed from Canada and USA made T1 & AR400 Steel at all critical points.
- Extra thick shanks support themselves without gussets.
- Comes standard with CAT style J-Series teeth. If you require a different style of tooth, please inquire.

CLICK TO CHECK AVAILABILITY & PRICING

Machine Class	Product Code	Tines	Width	Shank Thickness	Tooth Type	Ground Penetration	Approx. Weight (Lbs)
8-11 Ton	DPRR-008-011-W022T04	4	22″	1.25″	J225	24″	Currently Unavailable
	DPRR-008-011-W026T05	5	26″				
12-16 Ton	DPRR-012-016-W034T04	4	34″	1.50″	J225	28″	
	DPRR-012-016-W046T05	5	46″				
17-21 Ton	DPRR-017-021-W042T04	4	42″	1.75″	J250	32″	
	DPRR-017-021-W054T05	5	54″				
22-27 Ton	DPRR-022-027-W042T04	4	42″	2.00″	J300	36″	
	DPRR-022-027-W048T05	5	48″				
	DPRR-022-027-W054T06	6	54″				
28-35 Ton	DPRR-028-035-W042T04	4	42″	2.50″	J400	38″	
	DPRR-028-035-W048T05	5	48″	2.00″	J350		
	DPRR-028-035-W054T06	6	54″				
36-44 Ton	DPRR-036-044-W054T05	5	54″	2.50″	J400	40″	
	DPRR-036-044-W060T06	6	60″				
	DPRR-036-044-W066T07	7	66″				
45-55 Ton	DPRR-045-055-W048T05	5	48″	3.00″	J450	42″	
	DPRR-045-055-W060T06	6	60″				
	DPRR-045-055-W072T07	7	72″				

Pins sold separately. Wedge Style Ears: Available (Non-standard patterns, additional charges may apply).

1-800-952-7849

trkattachments.com

sales@trkattachments.com

All attachments include a 2 year limited warranty. If you have any questions or have a custom requirement for your attachment, please give us a call.

COMPARE RIPPERS

SABRE TOOTH ROOT RIPPER

A. Our Root Ripper has a normal tip radius (The distance from the center of the main pivot pin to the tip of the tooth). This allows the tip of the root ripper to get underneath most stumps or debris.

B. Our Root Rippers have a serrated front wear plate to allow the ripper to cut roots.

C. Rock Chisel Tooth installed.

D. Longer Shank for deeper penetration.

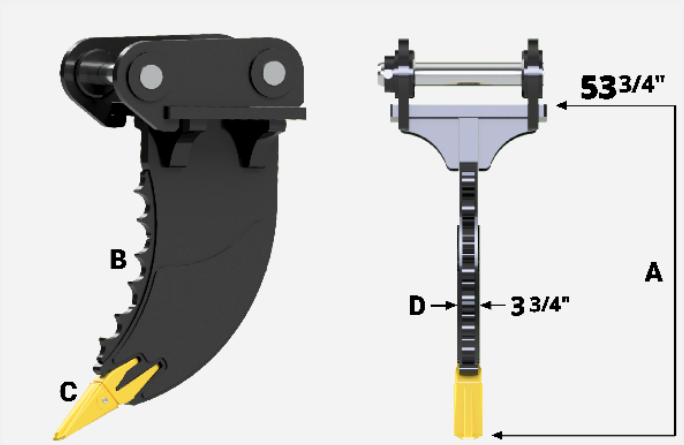

SEVERE DUTY ROCK RIPPER AND FROST PICK

A. The reduced tip radius (The distance from the center of the main pivot pin to the tip of the tooth) increases the amount of force that the ripper exerts at the tip. This is required when breaking up rock or frost.

B. Our Rock Rippers have smooth front and rear wear plates for increased longevity.

C. An oversized Rock Chisel Tooth installed.

D. Extra Thick Shank to accommodate the increased forces caused by the reduced tip radius.

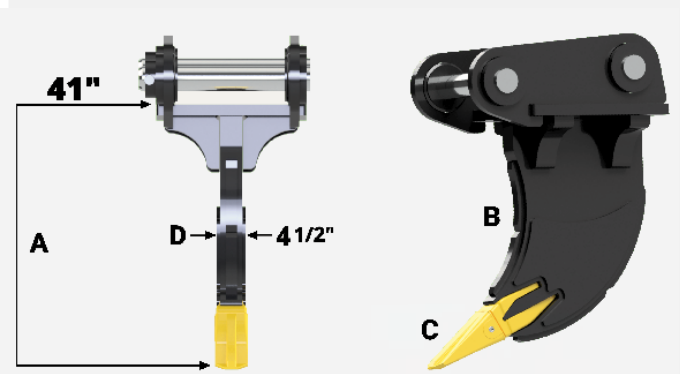

1-800-952-7849

trkattachments.com

sales@trkattachments.com

All attachments include a 2 year limited warranty. If you have any questions or have a custom requirement for your attachment, please give us a call.

SABRE TOOTH STUMP AND ROOT RIPPER

TRK ATTACHMENTS
A DIVISION OF LIFCO

- AR400 wear plates on sides
- AR400 Sabre Teeth on front
- Rock Chisel Tooth installed
- Longer Shank for deeper penetration
- Double Shank Ripper also available (please inquire)

Machine Class	Product Code	Shank Thickness	Length*	Tooth Type	Approx. Weight (Lbs)
04-07 Ton	STSR-004-007-L030	2.25″	30″	J250	332
08-11 Ton	STSR-008-011-L036	2.50″	36″	J300	470
12-22 Ton	STSR-012-022-L042	2.00″	42″	J350	988
23-33 Ton	STSR-023-033-L048	2.50″	48″	J400	1376
34-45 Ton	STSR-034-045-L054	3.00″	54″	J450	1855
46-55 Ton	STSR-046-055-L060	3.50″	60″	J550	2756

SEVERE DUTY ROCK RIPPER AND FROST PICK

CLICK TO CHECK AVAILABILITY & PRICING

- AR400 wear plates on sides, front edge and back
- Oversized Rock Chisel Tooth installed
- Extra Thick Shank

Machine Class	Product Code	Shank Thickness	Length*	Tooth Type	Approx. Weight (Lbs)
04-07 Ton	SDRR-004-007-L018	2.50″	18″	J250	289
08-11 Ton	SDRR-008-011-L024	3.00″	24″	J300	425
12-22 Ton	SDRR-012-022-L030	2.50″	30″	J350	875
23-33 Ton	SDRR-023-033-L036	3.00″	36″	J400	1220
34-45 Ton	SDRR-034-045-L042	3.50″	42″	J450	1770
46-55 Ton	SDRR-046-055-L048	4.00″	48″	J550	2590

Pins sold separately. Wedge Style Ears: (Non-standard Only) Available.
*Length is measured from the bottom of the base to tip of tooth.

1-800-952-7849
trkattachments.com
sales@trkattachments.com

All attachments include a 2 year limited warranty. If you have any questions or have a custom requirement for your attachment, please give us a call.

DOUBLE SHANK STUMP PULLER

TRK ATTACHMENTS
A DIVISION OF LIFCO

- Constructed from Canada and USA made T1 & AR400 Steel at all critical points.
- Double shanks get an extra strong grip on the stump compared to a single shank ripper. Shank edges serrated to grip the stump when pulling it out.
- The cutting edge between the shanks is bevelled and sharpened to make slicing through tap roots a breeze!
- Comes with CAT style J-Series teeth. Other tooth preferences available (please inquire).
- Standard length of shanks is measured from below the baseplate of the ears to the tips of the teeth. This is a reduced length compared to a normal bucket to give the stump puller increased break force. We can build stump pullers to your exact bucket length (tip radius) if that is your preference (please inquire).

CLICK TO CHECK AVAILABILITY & PRICING

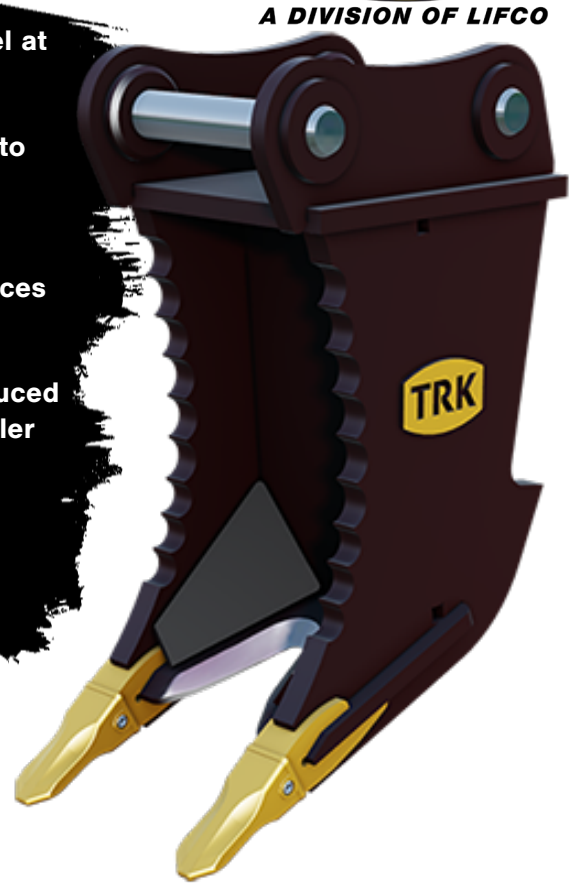

Machine Class	Product Code	Width	Length	Tooth Type	Approx. Weight (Lbs)
12-16 Ton	DSSP-012-016-W015L30	15″	30″	J300	955
17-21 Ton	DSSP-017-021-W018L36	18″	36″	J300	1350
22-27 Ton	DSSP-022-027-W020L42	20″	42″	J350	1688
28-35 Ton	DSSP-028-035-W022L48	22″	48″	J400	1984
36-44 Ton	DSSP-036-044-W024L54	24″	54″	J400	2450
45-55 Ton	DSSP-045-055-W026L60	26″	60″	J450	3276

Pins sold separately.
Wedge Style Ears: Available (Non-standard patterns, additional charges may apply).

1-800-952-7849
trkattachments.com
sales@trkattachments.com

All attachments include a 2 year limited warranty. If you have any questions or have a custom requirement for your attachment, please give us a call.

HOW TO INSTALL YOUR NEW THUMB

PIN-ON THUMBS

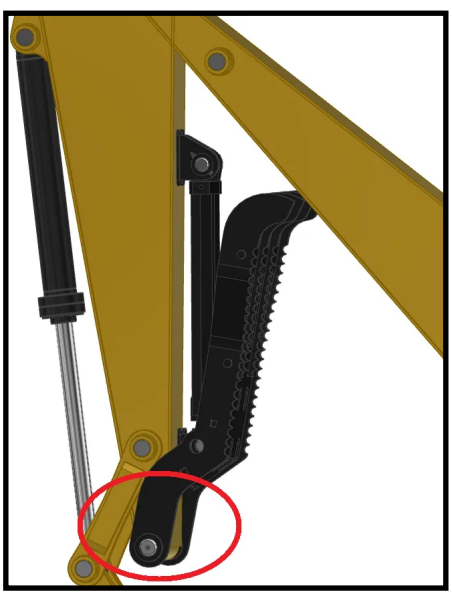

1. Remove the main stick pin.
2. Fit the Thumb over the coupler / bucket's stick pin.
3. Insert the stick pin into the thumb, coupler, and stick.
4. Bolt it on.
5. Rest the thumb on the stick.
6. Position the lock-plate wherever the bolt hole lines up.
7. If it's hydraulic, retract the cylinder completely and weld the mount to the stick at the point where it ends up.

   If it's a manual thumb, the positioner can be welded wherever you want, but will alter where the thumb is at each position. A dimension from the stick pin to the bottom of the positioner baseplace (which is different for every thumb) can be provided upon request.

WELD-ON THUMBS

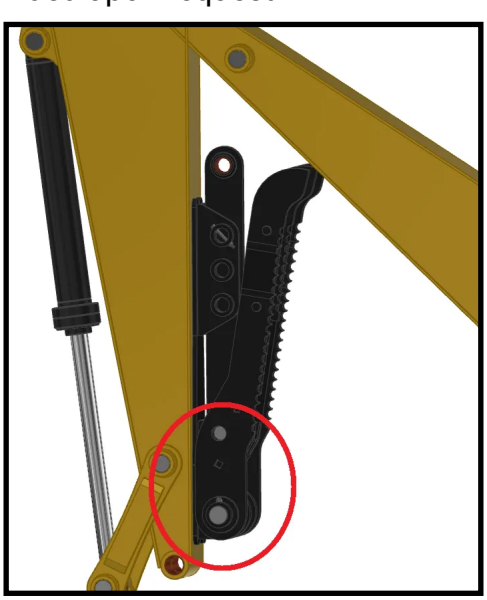

1. Curl the coupler/bucket all the way in.
2. Mount the thumb as low as you can go on the stick.
3. Center the thumb horizontally and weld it into place.

REPLACEABLE TEETH

HOW TO INSTALL YOUR NEW TEETH

1. For safety, tag out the machine and put on your safety boots and glasses. You will need a hammer, a wire bristle brush, a pin removal tool, and the new teeth you wish to install.
2. Your bucket, ripper, or rake should be positioned with its teeth parallel to the ground.
3. On the retainer side of the tooth, drive the pin removal tool into the pin, pushing it toward the opposite side of the tooth.
4. After taking the tooth off, clean up the adapter with a wire bristle brush.
5. Insert the retainer into the adapter and slide the new tooth over the adapter.
6. Insert the pin through the tooth and adapter from the side opposite the retainer.
7. Hammer the pin until it is flush with the side of the tooth.
8. Check that the pin is locked in place.

EXCAVATOR PINS

TRK ATTACHMENTS
A DIVISION OF LIFCO

- Includes a chamfer and a bolt hole
- Pins are standard-length
- Additional add-ons include rings, flags, grease holes, custom lengths or any other customization (please inquire)

CLICK TO CHECK AVAILABILITY & PRICING

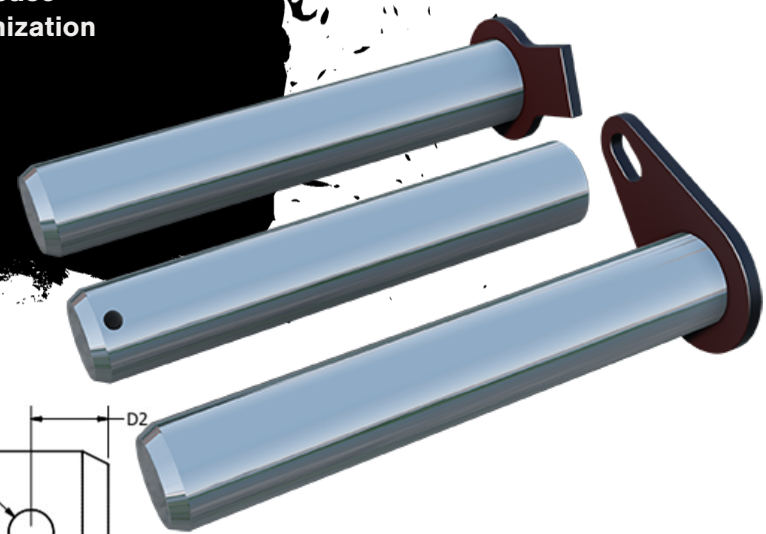

Tolerance of +/- 0.1mm (+/- 0.005") unless specified*

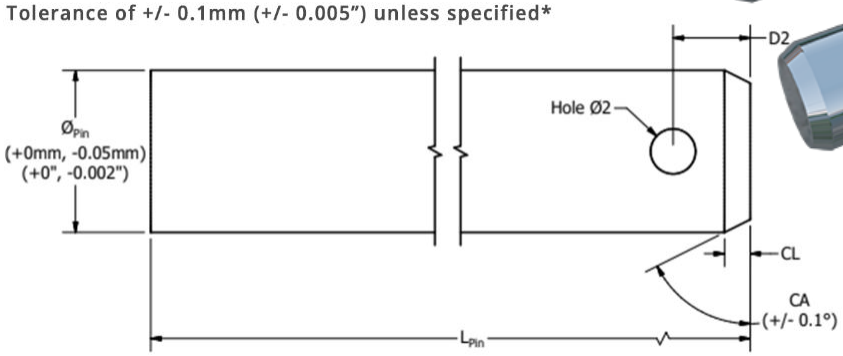

(M) Metric
(I) Imperial

Product Code	Ø	L (M)	L (I)	CL (M)	CL (I)	CA	Hole Ø2 (M)	Hole Ø2 (I)	D2 (M)	D2 (I)
PIN40	40MM	350mm	13.780″	6.3mm	0.250″	60°	10mm	13/32″	19.5mm	0.768″
PIN45	45MM	394mm	15.512″	6.3mm	0.250″	60°	10mm	13/32″	19.5mm	0.768″
PIN50	50MM	444mm	17.480″	6.3mm	0.250″	60°	10mm	13/32″	19.5mm	0.768″
PIN60	60MM	485mm	19.094″	9.5mm	0.375″	60°	13mm	17/32″	25.7mm	1.012″
PIN65	65MM	485mm	19.094″	9.5mm	0.375″	60°	13mm	17/32″	25.7mm	1.012″
PIN70	70MM	525mm	20.669″	9.5mm	0.375″	60°	13mm	17/32″	25.7mm	1.012″
PIN80	80MM	624mm	24.567″	12.7mm	0.500″	60°	16.5mm	21/32″	32.4mm	1.276″
PIN90	90MM	682mm	26.850″	12.7mm	0.500″	60°	19.5mm	25/32″	35.4mm	1.394″
PIN100	100MM	799mm	31.457″	12.7mm	0.500″	60°	25.5mm	1-1/32″	41.4mm	1.630″
PIN110	110MM	804mm	31.654″	12.7mm	0.500″	60°	25.5mm	1-1/32″	41.4mm	1.630″

1-800-952-7849
trkattachments.com
sales@trkattachments.com

TRK

ATTACHMENTS

A DIVISION OF LIFCO

©2026 Lifco Hydraulics. All Rights Reserved.